□□□ □□□□□

□4□ □□□□□

[illegible]

1. [illegible]
2. [illegible]
3. [illegible]

[illegible]

[illegible]. [illegible]

[illegible].

[illegible]

1. [illegible]

(1) [illegible] [illegible]____ [illegible].

(2) [illegible]____ [illegible].

[illegible]

2. [illegible]____ [illegible]. [illegible] V [illegible] p [illegible]____ [illegible].

[illegible]

3. [illegible]____ [illegible].

[illegible] T

[illegible]

1.

(1) V .

(2) p .

(3) T .

2.

(1)

( ) .

(2) .

[illegible]

(1) [illegible]. [illegible]36 ℃[illegible]

[illegible].

(2) [illegible]40 ℃[illegible]

[illegible].

- [illegible]

1. [illegible]
2. [illegible]
3. [illegible]
4. [illegible]
5. [illegible]

[illegible]

1. [illegible]______[illegible]“[illegible]”[illegible]

[illegible]__________.

2. [illegible]__________.

3. [illegible]“________________”[illegible].[illegible]________[illegible].

4. [illegible].

[illegible]

[illegible]

1. [illegible]

		[illegible]	[illegible]
[illegible]	[illegible]	[redacted]	[redacted]
	[illegible]	[redacted]	[redacted]
[illegible]		[redacted]	

2. [illegible]

[illegible]

[illegible]. [illegible] [redacted] [illegible].

3. [illegible]

3. [illegible]

(1) [illegible]

① [illegible]

② [illegible]

③ [illegible].

(2) [illegible]

[illegible] A [illegible] B [illegible] A [illegible] B [illegible]

[illegible].

[illegible]

[illegible]

[illegible]

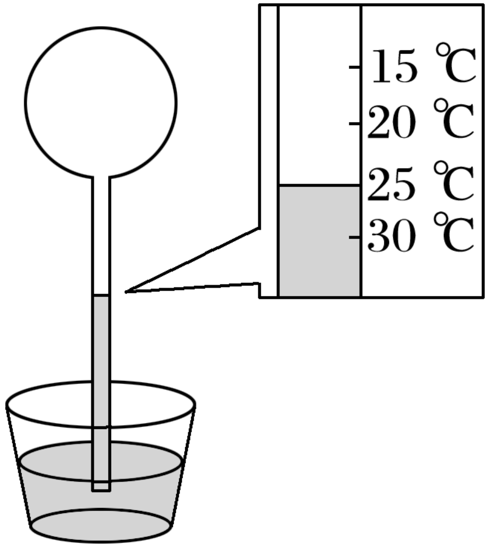
15 ℃
20 ℃
25 ℃
30 ℃

[illegible].[illegible]

[illegible].

[illegible]

[illegible]

1. [illegible]

[illegible]	[illegible]
[illegible]	[illegible] ____[illegible]____ [illegible]
[illegible]	[illegible] ____[illegible]____ [illegible]
[illegible]	[illegible] ____[illegible]____ [illegible]
[illegible]	[illegible] ____[illegible]____ [illegible]

[illegible] -32 [illegible] 212 [illegible] 180 [illegible]
[illegible]

2. [illegible]

(1) [illegible]________[illegible].（[illegible]）

(2) [illegible].

(3) [illegible]________[illegible]________[illegible].（[illegible]，[illegible]）

3. [illegible] T [illegible] t

(1) [illegible]____________[illegible] 0 ℃ [illegible]____________[illegible] 100 ℃ [illegible] 0 ℃ [illegible] 100 ℃ [illegible]________[illegible] 1 ℃.（[illegible]，[illegible]，[illegible]，100）

(2) [illegible].[illegible]________________.[illegible]____[illegible]__________[illegible]____.（[illegible]，T，[illegible]，K）

(3) [illegible] T [illegible]________________.（t [illegible] 273.15 K）

[illegible]

□ （□□）□□□□□□□□□□□□□□□□□

√ A. □□□□□□□□□□□□□□□□□□□□□□□□□□

B. □□□□□□□□□□□□□□□□□

C. □□□□□□ 3 ℃ □□□□□□□□□□□□□ 276.15 K

D. □ 33 ℃ □ 240.15 K □□□□□□

√